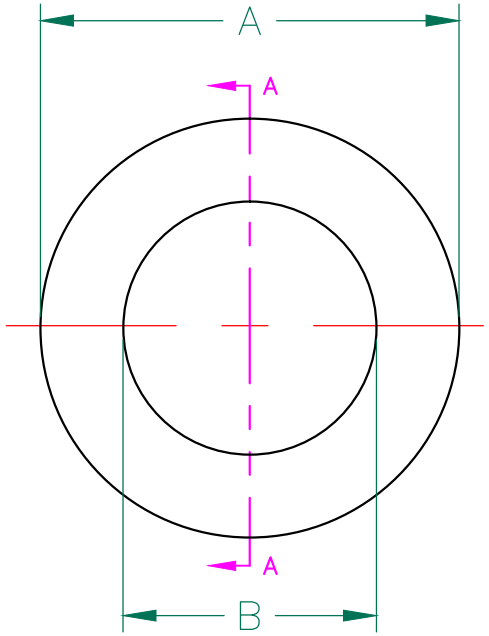

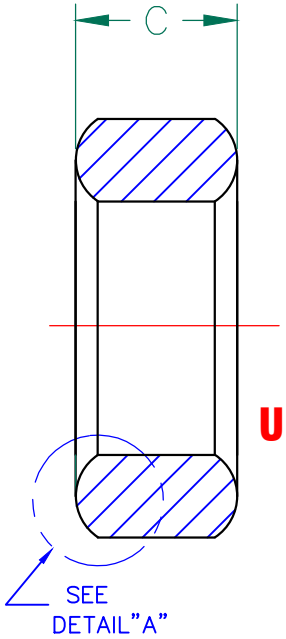

SECTION A–A

UNCONTROLLED DOCUMENT

IMPEDANCE (Z)			
Frequency	25 MHz	100 MHz	300 MHz
Nominal (REF)	37 Ω	90 Ω	199 Ω
Minimum	- Ω	72 Ω	- Ω

Z vs. FREQUENCY
(REF. ONLY)

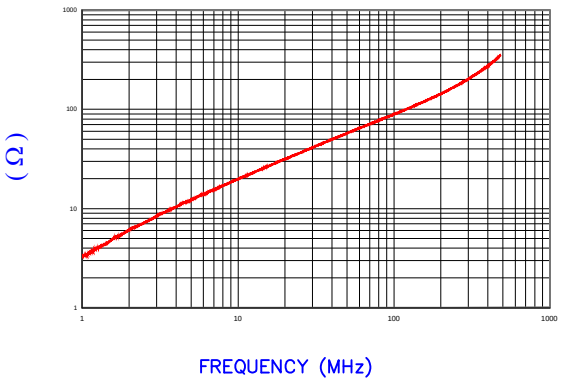

AGILENT E4991A Impedance/Material Analyzer
HP 16092A Test Fixture

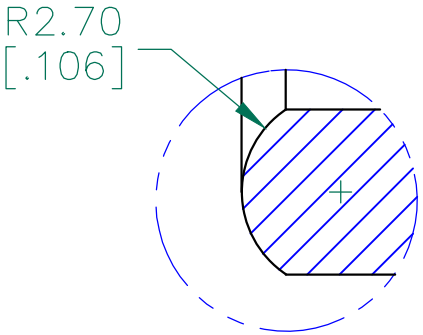

DETAIL "A"
SCALE: 10:1
(TYPICAL)

NOTES:

1. PARTS MUST BE TUMBLED, BURNISHED OR DEBURRED TO REMOVE ALL BURRS AND SHARP EDGES.
2. BLACK EPOXY COATING
3. COSMETIC SPECIFICATION REFER TO WI–QA–038.

FERRITE CORE DIMENSIONS (SPEC): mm [in]

A	22.50 [.886]	±	0.50 [.020]
B	13.80 [.543]	±	0.50 [.020]
C	8.80 [.347]	±	0.30 [.012]

COATED CORE DIMENSIONS (SPEC): mm [in]

A	22.80 [.886]	+ / −	1.20 [.047] / 0.40 [.016]
B	13.80 [.543]	+ / −	0.40 [.016] / 0.80 [.031]
C	8.80 [.347]	+ / −	0.70 [.028] / 0.30 [.012]

WEIGHT/1000 11.13 kgs [24.54 Lbs]

SCALE DRAWING 1:1

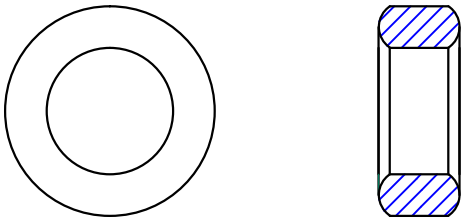

28B0886–20H

DIMENSIONS ARE IN mm [INCHES].

REV	DESCRIPTION	DATE	INT
A	ORIGINAL DRAFT	02/22/11	JUN

This print is the property of Laird Tech. and is loaned in confidence subject to return upon request and with the understanding that no copies shall be made without the written consent of Laird Tech. All rights to design or invention are reserved.

Laird

PROJECT/PART NUMBER:	REV	PART TYPE:	DRAWN BY:
28B0886–20H	A	FERRITE CORE	JUN

DATE:	SCALE:	MATERIAL:
11/22/11	2 : 1	FERRITE

CAD #	TOOL #
28B0886–20H–A	B0886